Hillmar
Hillmar Industries Ltd.
7371 Vantage Way
Delta, BC V4G 1C9
P:604 946-7115 F:604 946-0329
info@hillmar.com www.hillmar.com

COUPLING RKSM
RKSM-360-MSS-LSH-1000-30-24930
SPECIFICATION SHEET
SLS & MKTG
ENGLISH

Sheet Number:	
Job Number:	
Form Number:	429-680-46901PT

Company / Project Reference:	Date.:	Page.:	Document Package No.:	Rev.:
		1 OF 1		

Inventor Drawing

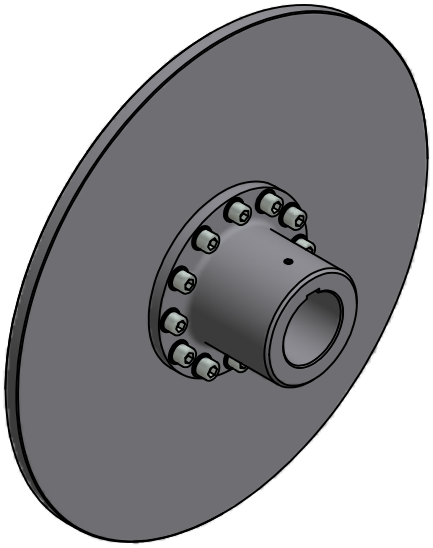

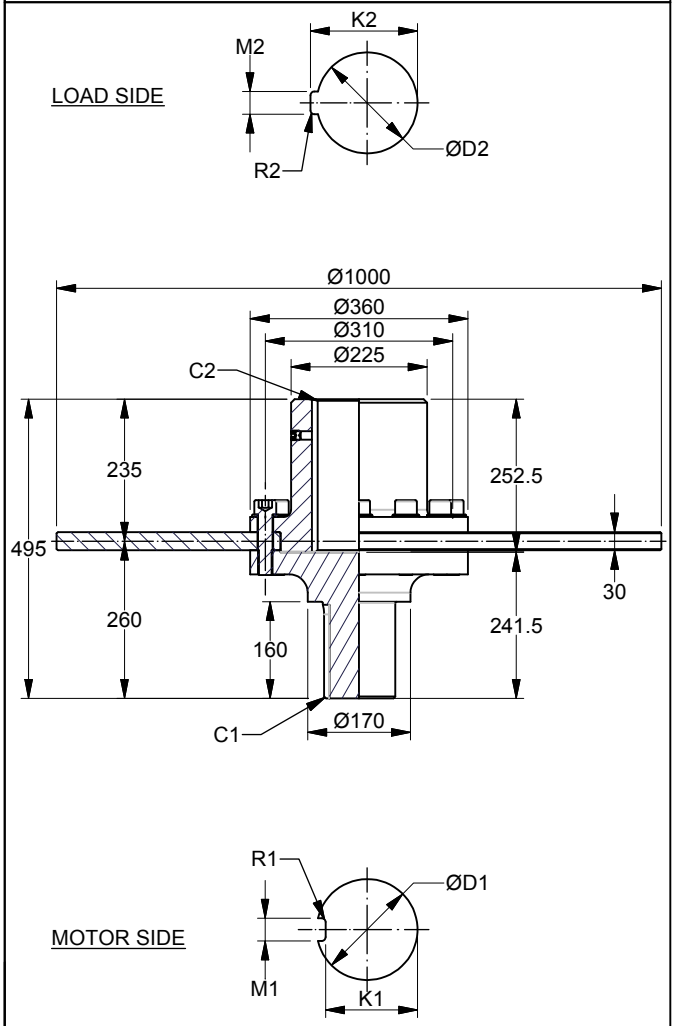

FEATURE	CODE
Rigid coupling	RKSM
Coupling size (Hub OD)	360
Motor side	MSS
Load side	LSH
Disc diameter (mm)	1000
Disc thickness (mm)	30
Maximum coupling torque (Nm)	24930

Example for ordering	RKSM-360-MSS-LSH-1000-30-24930

TECHNICAL DATA

Disc model	SDBD-1000-30-360
Disc diameter (mm)	1000
Hub bore size MIN. (mm)	100
D1 MAX. (mm)	160
D2 MAX. (mm)	160
Moment of inertia (kgm^2)	32.74
Mounting bolts	12 x M24
Bolt tightening torque (Nm)	710
MAX. coupling torque TkMAX (Nm)	24930
MAX. coupling speed (RPM)	1800
Weight (kg)	349

CUSTOMER SPECIFICATIONS

Motor side	Load side
D1:_____mm	D2:_____mm
M1:_____mm	M2:_____mm
K1:_____mm	K2:_____mm
R1:_____mm	R2:_____mm
C1:_____mm	C2:_____mm

NOTES

Coupling balancing grade ISO 1940-G6.3 is guaranteed for all coupling parts.

All figures are nominal figures only

All dimensions are in millimeters

Document Template #710-101-62058

** ALL TECHNICAL DATA IS SUBJECT TO CHANGE WITHOUT NOTICE **
Hillmar works have a fully registered ISO 9001-2008 quality assurance programme (QCB #01-1525)

C:\TEMP\a3f49bb3-e10c-4cd0-aed8-26c1c4c1b337\8000052828\6\HILLMAR\HILLMAR PRODUCTION\04 THRUSTER DB\0700-4\07004005 PKM-GKM-RKSM-RKX\SPC-SHT-PKM-GKM-RKSM-RKX\03 RKSM\46901 RKSM-360-MSS-LSH-1000-30-24930.idw